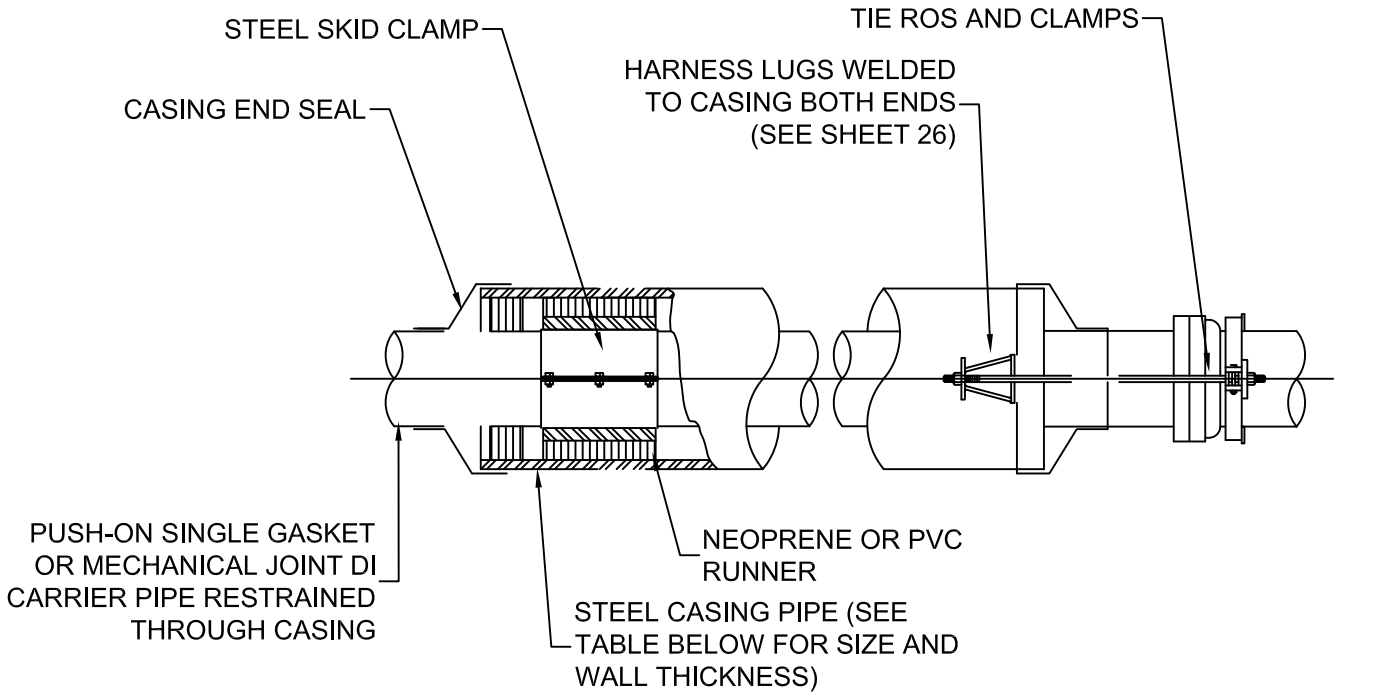

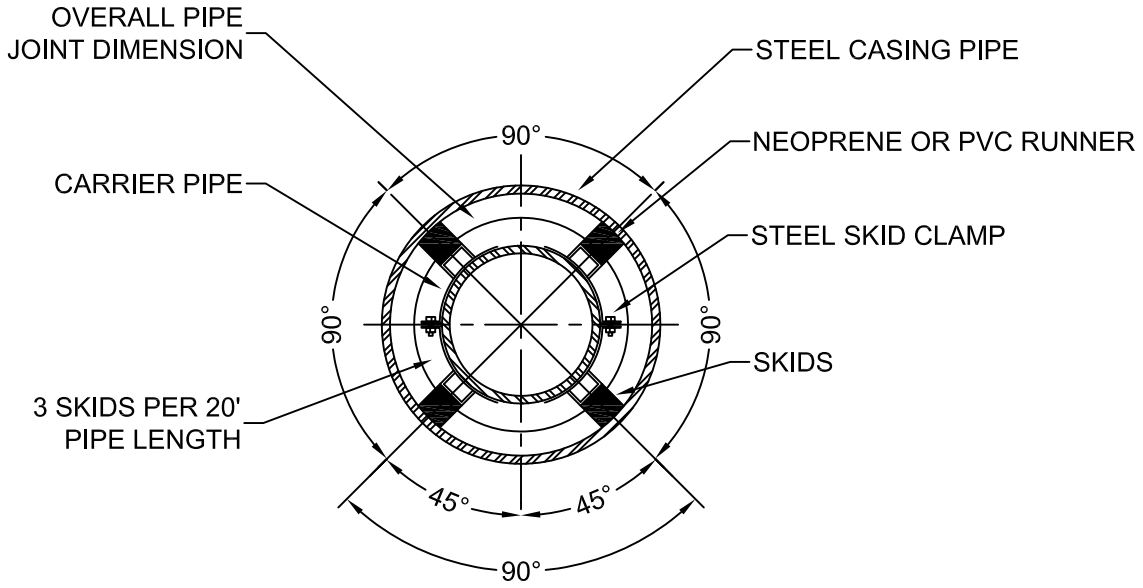

SCALE: 1"=1'

City of Wheat Ridge

DEPARTMENT OF PUBLIC WORKS
ENGINEERING DIVISION

U-B04 BORE CASING

BORE CASING

APPROVED BY: SN APPROVE DATE 10/2016

DETAIL CODE

U